Χαρακτηριστικά

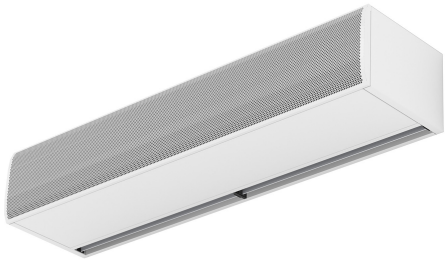

- Posebej oblikovana za vgradnjo v vrata hladilnic in zamrzovalnikov.
- Samonosilna konstrukcija ohišja iz pocinkane jeklene plošče, izdelano v strukturni epoksi-poliestrski barvi standardno bele barve RAL9016.Druge barve ali nerjaveče jeklo so na voljo po zahtevi.
- Velika fasetirana rešetka ne potrebuje intenzivnega vzdrževanja.Na voljo tudi z ravno mikro perforirano rešetko, elegantnejše za gospodarska vrata kjer ogrevanje ni potrebno.
- Anodizirani aluminijasti odhondi ventili oblikovani z zračnim profilom, nastavljivi od 0 do 15 ° na vsaki strani.
- EC dvosmerni centrifugalni ventilatorji, ki jih poganja zunanji rotorski motor in nizka raven hrupa, z zelo nizko porabo ventilatorjev.
- Tip "A" brez ogrevanja, samo zrak.
- Advanced Plug&Play control. Includes: Advanced PRO control with LCD display and integrated thermostat, door contact, 10m and remote control. With integrated functions: door delay (configurable); interface mode; operation, alarm and maintenance warning signals; and multiple digital inputs that modify the air curtain's operation.
- Includes protective varnish for the electronic board and control.
- Optional:
  • Auxiliary temperature sensors that improve air curtain control and increase energy savings.
  • Clever PRO intelligent control (automatic, programmable, ModBus via PLC, timer, etc.) with an additional temperature sensor.
- Includes varnishing on the PCB to protect it from corrosion.

Προδιαγραφές

50Hz

Μοντέλο	(m³/h)	(m)
KBB 1000 A	5-7	
KBB 1500 A	5-7	
KBB 2000 A	5-7	
KBB 2500 A	5-7	
KBB 3000 A	5-7	
KSB 1000 A	3,5-5	
KSB 1500 A	3,5-5	
KSB 2000 A	3,5-5	
KSB 2500 A	3,5-5	
KSB 3000 A	3,5-5	

60Hz

Μοντέλο	(m³/h)	(m)
KSB 1000 A	3,5-5	
KSB 1500 A	3,5-5	
KSB 2000 A	3,5-5	
KSB 2500 A	3,5-5	
KSB 3000 A	3,5-5	

Διαστάσεις

View from the top / *Vista superior*

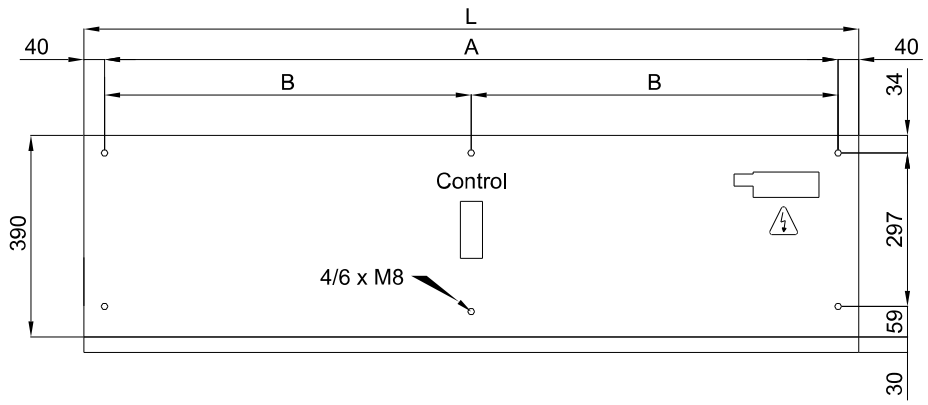

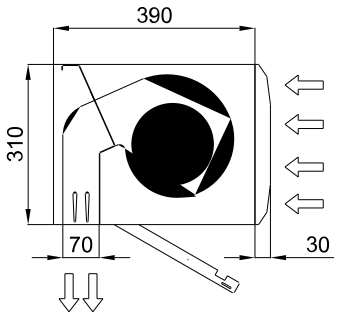

Lateral View / *Vista Lateral*

View from the bottom / *Vista inferior*

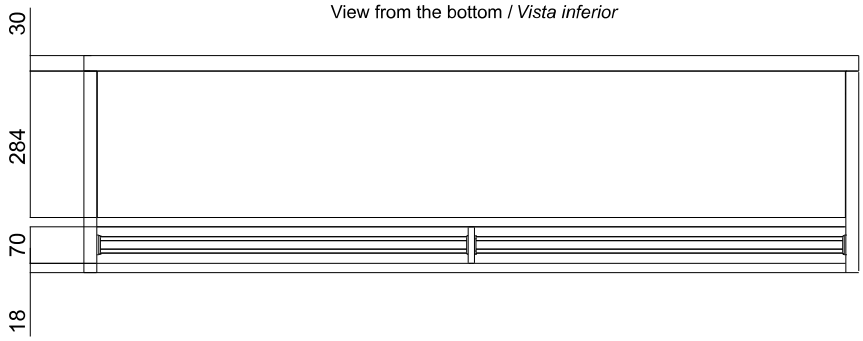

L	A	B
1000	920	-
1500	1420	710
2000	1920	960
2500	2420	1210
3000	2920	1460